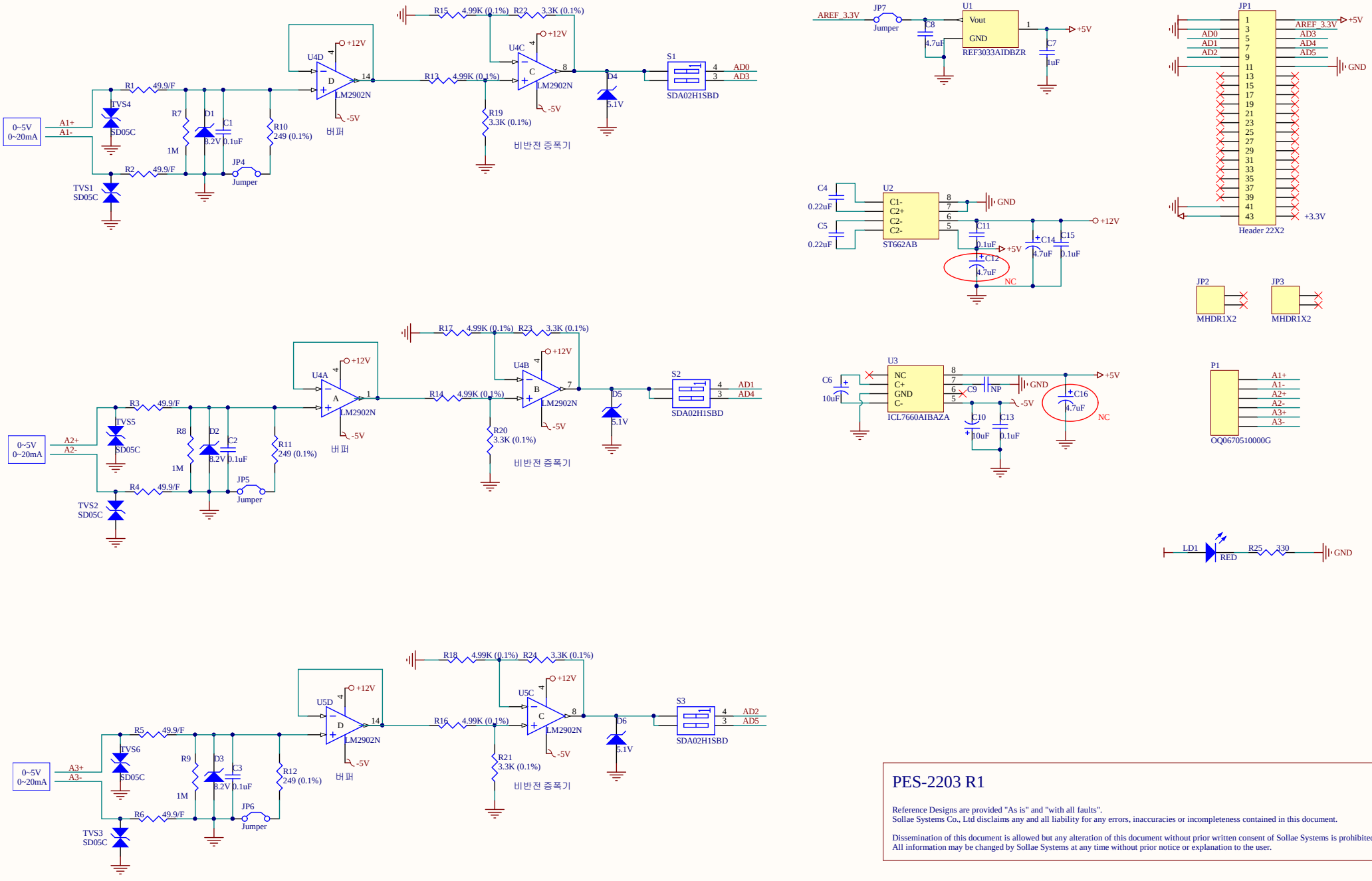

PES-2203 R1

Reference Designs are provided "As is" and "with all faults".
Sollae Systems Co., Ltd disclaims any and all liability for any errors, inaccuracies or incompleteness contained in this document.

Dissemination of this document is allowed but any alteration of this document without prior written consent of Sollae Systems is prohibited.
All information may be changed by Sollae Systems at any time without prior notice or explanation to the user.